Artificial Lift R&D Council

Gas-Lift in the Oil & Gas Industry: An Perspective from an Academic, Researcher and Entrepreneur

Dr. Paulo Waltrich

Associate Professor at LSU & Co-Founder of Lift Well International

LSU
LOUISIANA STATE UNIVERSITY

Lift Well International

June 11th, 2021 – ALRDC Keynote - Virtual Event

The PAST

Dr. Paulo Waltrich Background

- ✓ 2005 - BS. Mechanical Engineering at Federal University of Santa Catarina (UFSC), Brazil
- ✓ 2006 - Worked at Whirlpool (Brazil) developing new technologies/products for the refrigeration industry
- ✓ 2008 - MSc from UFSC
- ✓ 2009 - Joined TAMU PhD Graduate Program

Dr. Paulo Waltrich Background

Artificial Lift R&D Council

- ✓ 2010 & 2011– Worked at Petrobras America Summer
- ✓ 2012 – PhD in Petroleum Engineering from TAMU. Dissertation topic was Liq. Loading in Gas Wells
- ✓ Fall 2012 – Joined LSU as Assistant Professor

Dr. Paulo Waltrich Background

Artificial Lift R&D Council

- ✓ 2014 – Started working on Liquid-Assisted Gas-Lift
- ✓ 2014 – Started working on Valve Performance Clearing House (VPC)

Shell workover at LSU well #1 for the LAGL project

VPC Flow Loop

GL has NOT Changed Much in ~80 years

Artificial Lift R&D Council

- About 25,000 patents on GLVs (1929-1945) (BenAmara, 2016)
- Since early 1950s, not much innovation has been developed after the pressurized bellows and side pocket mandrels
- Unchanged systems can be seen as robust-originally-designed systems, but current GL systems are know by some major flaws

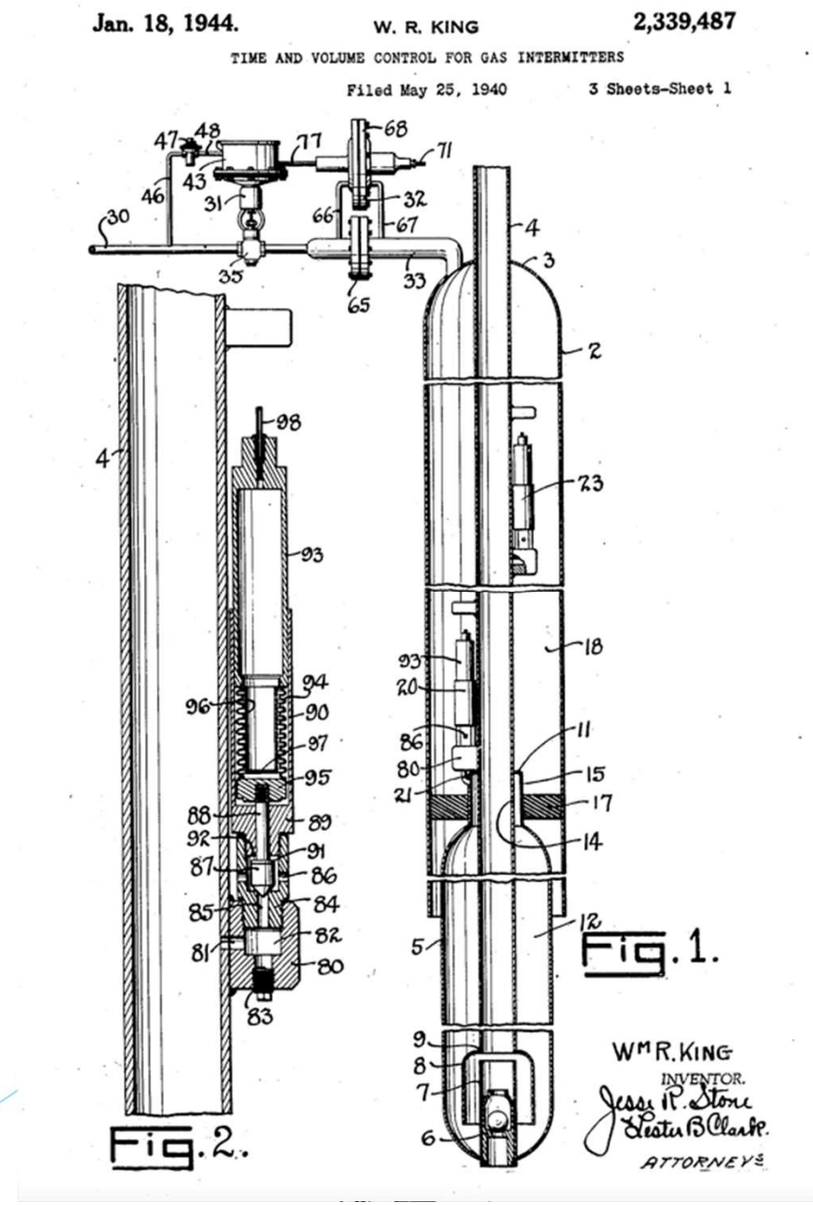

The PRESENT

GL is Still a Complex Operation

- Gas-Lift can be complicated, thus, there is resistance to learn

- Understanding multiphase flow and valve performance can be challenging

- Unloading process is complex and inaccurate:

  Survey by ExxonMobil on 251 GL wells (2008-2013): 38% of the wells were **multi-pointing!**

- Experience is important, but open mind is essential for relevant changes, and progress during challenging times….

Conservative industry

- Hard to acknowledge problems: it is still hard to show what is wrong with GL design
- Human nature: resistant to change!
- Lack of understanding makes it harder to acknowledge problems
- Lack of incentive due to “easy oil” until recently

Turning Bad News into Good News

- Little progress in about 80 years, which creates opportunities for innovators

- Potential for improvements is High since little progress has been made

- Lack of incentive due to “easy oil” until NOW!

Promising New Technologies

- Single-Point High-Pressure Gas-Lift
- Electric-Actuated GLVs
- Liquid-Assisted Gas-Lift

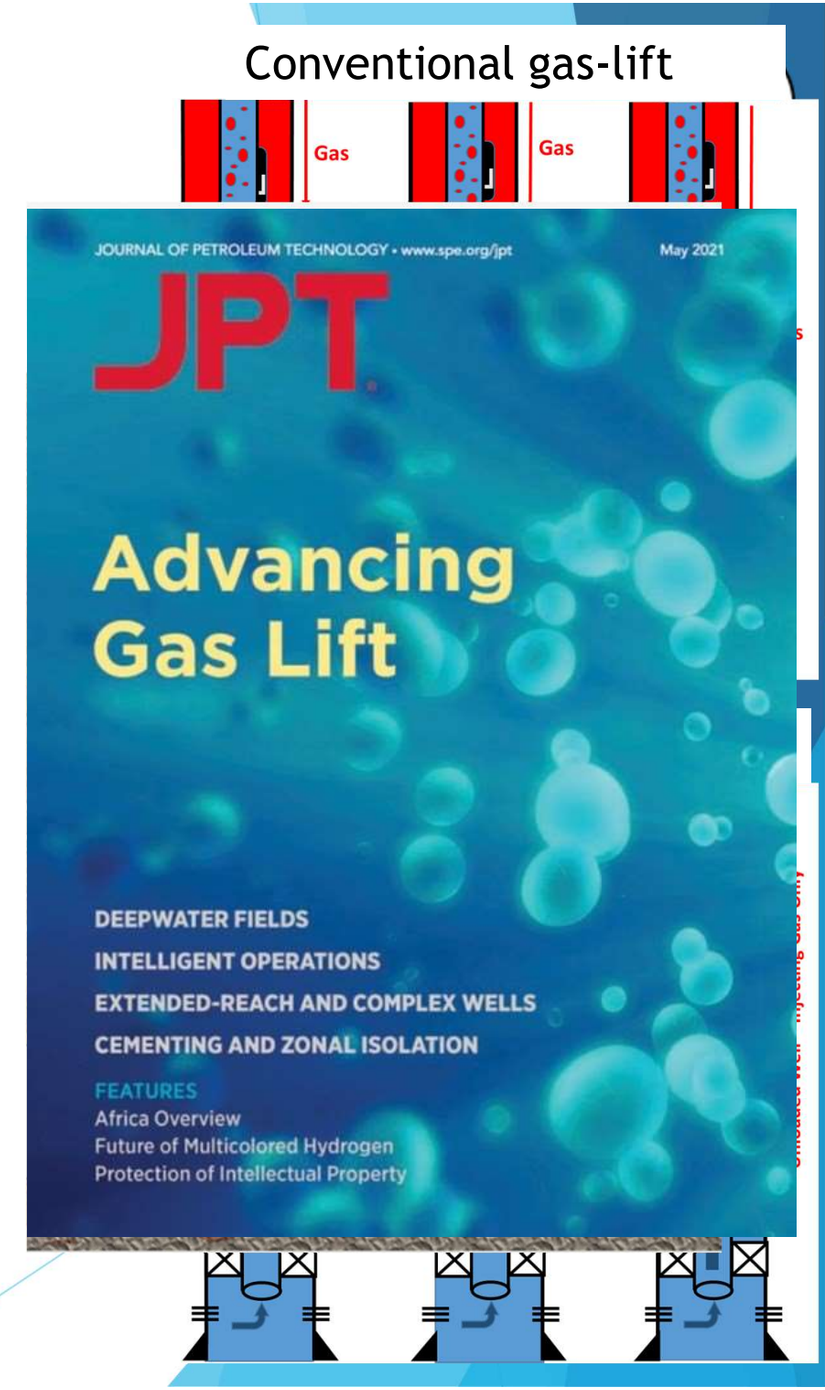

The FUTURE

Is Machine Learning/Artificial Intelligence/Data Analytics the Solution?

Artificial Lift R&D Council

- It will definitely help, but wont solve major problems
- ML/AI is another tool in the toolbox
- ML & AI without physics based model is not efficient
- Training and innovation can solve major problems

Vision for Future of Gas-Lift

- Automated systems that facilitates the use of GL
- Machine learning & Artificial Intelligence will enhance equipment performance and operations
- Better training for engineers on GL fundamentals: multiphase flow in pipes and valve performance
- Rewarding career for GL professionals due to potential for improvement

Acknowledgements

- Volunteers of this gas-lift workshop
- LSU
- ALRDC

THANK YOU!!!

Copyright

Disclaimer

The following disclaimer shall be included as the last page of a Technical Presentation or Continuing Education Course. A similar disclaimer is included on the front page of the Gas-Lift Workshop Web Site.

The Artificial Lift Research and Development Council and its officers and trustees, and the Gas-Lift Workshop Steering Committee members, and their supporting organizations and companies (here-in-after referred to as the Sponsoring Organizations), and the author(s) of this Technical Presentation or Continuing Education Training Course and their company(ies), provide this presentation and/or training material at the Gas-Lift Workshop "as is" without any warranty of any kind, express or implied, as to the accuracy of the information or the products or services referred to by any presenter (in so far as such warranties may be excluded under any relevant law) and these members and their companies will not be liable for unlawful actions and any losses or damage that may result from use of any presentation as a consequence of any inaccuracies in, or any omission from, the information which therein may be contained.

The views, opinions, and conclusions expressed in these presentations and/or training materials are those of the author and not necessarily those of the Sponsoring Organizations. The author is solely responsible for the content of the materials.

The Sponsoring Organizations cannot and do not warrant the accuracy of these documents beyond the source documents, although we do make every attempt to work from authoritative sources. The Sponsoring Organizations provide these presentations and/or training materials as a service. The Sponsoring Organizations make no representations or warranties, express or implied, with respect to the presentations and/or training materials, or any part thereof, including any warrantees of title, non-infringement of copyright or patent rights of others, merchantability, or fitness or suitability for any purpose.